Wavecom

TnP-500

Portable Appliance Test and Print Kit

User Manual

+ Certificate of Warranty and Product Support Information

Wavecom Certificate of Warranty

Your Wavecom Appliance Tester comes with a conditional 36 month warranty.

Your warranty applies unconditionally for 12 months from the date of purchase.

This can be extended an additional 12 months if your Tester is calibrated within 12 months of the date of purchase.

This can be extended a further 12 months if you calibrate you tester a second time within 24 months of the date of purchase.

The Manufacturer (Wavecom Instruments Pty. Ltd.) warrants its products against defects in materials and workmanship for a period of 12 months from the date of purchase. During the warranty period, the Manufacturer will repair (or at its option replace at no charge) the product that proves to be defective. This warranty does not apply if the product has been damaged by accident, abuse, misuse or mis-application or as a result of service or modification by anyone other than the Manufacturer of this tester.

The TnT & TnP Product Range of devices or its Manufacturer is not responsible for incidental or consequential damages resulting from the breach of any express or implied warranty, including damage to property and to the extent permitted by law, damages for personal injury. The distributors of this product cannot assume liability or responsibility for any loss of damage resulting from the use of this device.

The Manufacturer reserves the right to discontinue models, change specifications, price or designs at any time without notice or obligation.

Product Support

At Wavecom we take great pride in our customer service and support. We provide assistance, troubleshooting and support over the phone, via Skype or Facetime, via email or in person to help you get the most from your Wavecom Portable Appliance Tester. To be eligible for our support services you must register your product.

You can register online at:

https://www.wavecom.com.au/wcm_product_registration.php

Safety Information

The TnP-500 has been designed to meet stringent safety requirements, however no device can completely protect you from the consequences of incorrect use. The testing of electrical appliances requires that extra care and caution is taken at all times to ensure personal safety.

The Manufacturer also advises that appliance testing should be conducted by a *Competent Person* who is suitably trained (see Section 1.4.5 on Page 10 of AS/NZS 3760:2022 for the definition of *Competent Person*), as well as any additional legislation or rulings in different states. If in doubt, the manufacturer suggests the user contact their responsible authority.

For maximum safety, always ensure that the following advice is followed:

- The equipment being tested is in good condition and passes a visual check.
- All instructions are read, understood and followed.
- The power supply connections are always checked - if the N-E (middle) LED Indicator flashes red, do not proceed before consulting the manual.
- Always use specified fuses and protection devices.
- Do not use leads that require repair or are damaged.
- If you are unsure, call a licensed Engineer/Electrician.

Important Calibration Information

Your Wavecom Appliance Tester should be calibrated every 12 months. A correctly calibrated tester is essential for ensuring testing accuracy is maintained, and for complying with the AS/NZS 3760:2022 standards.

To book your tester in for calibration, go to:

https://www.wavecom.com.au/calibrations

Then, send your tester to your nearest calibration service centre:

For Western Australian customers:

Wavecom WA Calibrations
Unit 2/17 Casino Street,
Welshpool, WA 6016

For all other customers:

Wavecom Calibrations
257 Grange Road,
Findon, SA 5023

Tester Serial & Purchase Information Rear Cover

Important Information

- TnP-500 Integrated Appliance Tester
- Wavecom Thermal Transfer Printer
- Barcode Scanner
- Keyboard
- IEC Power Cable
- IEC Test Lead (500mm Orange)
- USB A to USB B Interface Cable
- Earth Lead with Alligator Clips (1800mm Black)
- Shockproof Industrial Case (IP67 Rated)
- 1 Roll (500) of White Labels
- 1 Roll of Printing Ribbon
- WinPATS Software License
- 12 Month Calibration Certificate
- 36 Month Conditional Warranty
- User Manual

Contents

TnP-500 Diagrams

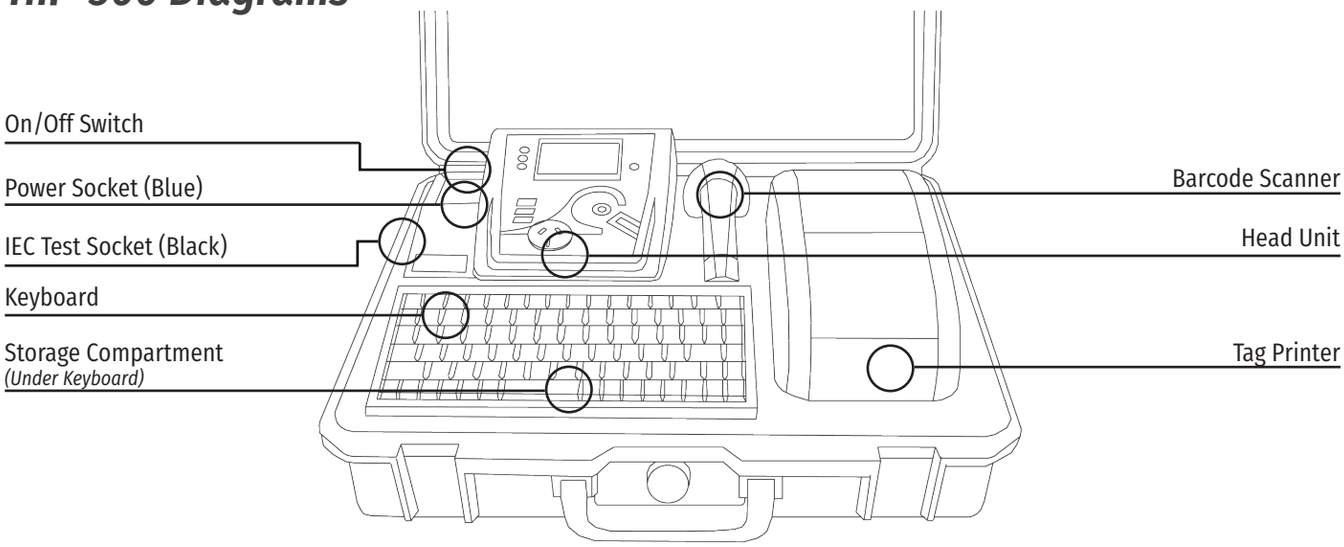

Case Diagram

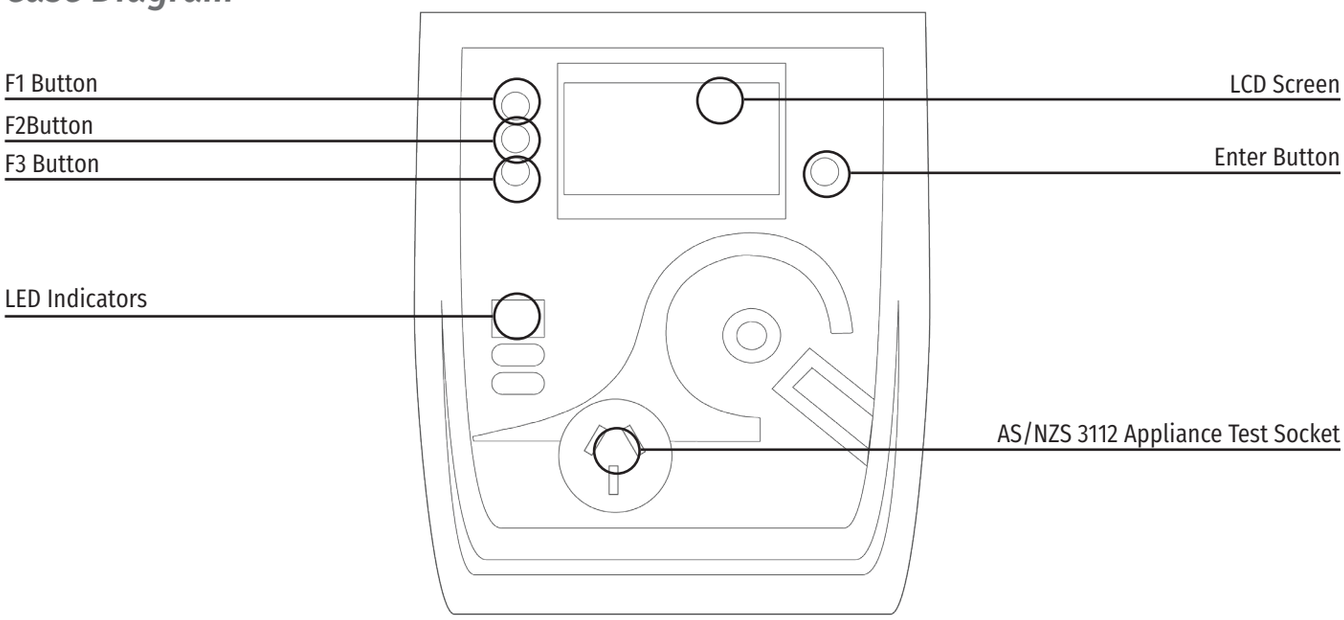

Head Unit Diagram

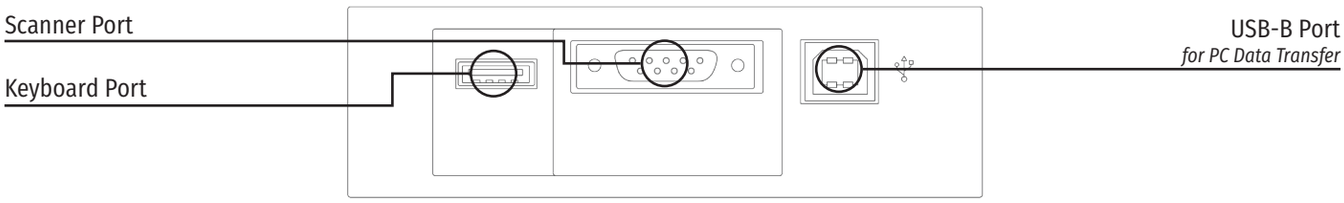

Storage Compartment Port Panel Diagram

Note: the Keyboard and Scanner ports are wired specifically to work with the included TnP-500 Keyboard and Barcode Scanner, and will not operate as these ports (USB & RS-232) normally would.

Precautions

Competent Person

To ensure that all electrical equipment or devices are inspected, tested and tagged correctly, regulations require that a 'competent person' such as a Licensed Electrician be employed to perform the required tests. Please refer to the above definition as described in the current AS/NZS 3760:2022 Standard and in addition, to any other local legislation or jurisdictions as may be relevant in your State.

A person competent to undertake Inspection and Testing of electrical equipment must have:

- Knowledge and practical experience of electricity and its hazards.
- A clear understanding of precautions to avoid danger.
- The ability to recognise at all times whether or not it is safe for work to continue.
- The ability to carry out visual examinations of electrical equipment.
- The ability to distinguish between electrical equipment that is double insulated and equipment that is earthed as well as being able to identify the appropriate test for each type.
- The competency to safely carry out the Earthing Continuity, Insulation Resistance or Leakage Test and RCD tests on electrical equipment.
- The knowledge of how to use the relevant testing instruments, interpret and record the results for compliance with the Standard/Workplace requirements.
- The knowledge to be able to correctly recommend the frequency of testing required.

Due to the potential hazards of electrical testing, due care must be taken at all times.

Replacing Fuses

From time to time an appliance may cause an internal fuse within your TnP-500 to break. When this occurs you will need to replace the fuse. If you prefer you can return your tester to Wavecom and we can replace the fuse for you, or if you wish you may replace the fuse.

LED Indicators

Your TnP-500 checks the polarity and connectivity of the mains supply power and displays this information via the LED Indicators. Each LED represents a comparison of the voltages between the Neutral to Earth, Active to Earth, and Active to Neutral respectively.

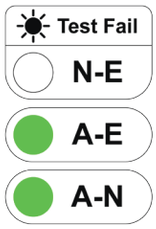

If the A-E & A-N (green) lights are on and the N-E (red) light is off, the Mains Supply Test has passed and you can continue with your testing.

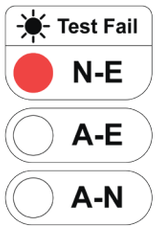

If the central N-E light is on (red) there is a voltage difference between the Neutral and Earth, or there is no Earth connected to the TnP-500 supply (this is likely to occur when working with a generator or inverter).
DO NOT PROCEED if the N-E light is on and you intend to conduct load/leakage tests. If you are carrying out standard Insulation and Earth Bond tests, it is generally safe to continue.

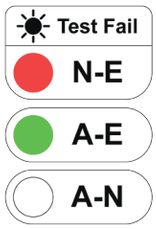

If both of the N-E (red) & A-E (green) lights are on, consult a qualified Electrician. This indicates a fault with the Mains Supply. DO NOT PROCEED with any testing on this Mains Supply.

WinPATS Premium

Your TnP-500 includes a license for WinPATS Premium, our asset management software designed specifically for test and tagging. WinPATS™ software provides comprehensive fixed & portable asset management and is able to track every aspect of an asset's life from New to Service, to Safety Audits, to full item service history.

To install WinPATS Premium, download the software from our website:

https://www.wavecom.com.au/software

Once the download is complete, run WinPATS_Installer.exe.

When you are prompted to enter your 16 digit product key, use the code located on the WinPATS Premium flyer that was included in your tester.

If your license does not validate, please contact us to obtain a new product key.

Operating your TnP-500

Powering on the Tester

Ensure all test cables (such as the Alligator Lead and Orange IEC lead) are removed, and that all your peripherals (such as the keyboard, barcode scanner and printer) are connected.

Connect your TnP-500 to mains power via the supplied power lead, then turn the Power switch on.

Your TnP-500 will begin in Memory Mode, which allows you to store test results and item information in the TnP-500's memory, print tags, and use the other useful features of the TnP-500, in addition to the general appliance testing functions.

To start your TnP-500 in Tester mode, which only allows you to conduct tests without saving results, press and hold F3 while turning your TnP-500 on. Your TnP-500 will also start in Tester mode if no peripherals (such as the keyboard, barcode scanner and printer) are connected.

The Barcode scanner will beep when your TnP-500 is powered on, indicating that it is also powered. If you do not hear a beep from the scanner, check the scanner connection.

Initially the printer's status light will be orange but after about 5-10 seconds it will change to green. The tester will not print unless the printer light is solid green. A flashing red status light can indicate a media or general printer fault (see 'Wavecom Thermal Transfer Printer' for more information).

Options Menu

During the course of using your TnP-500 you may need to adjust test parameters or other settings. To access the Options Menu, hold Enter and press F2. We do not recommend adjusting the settings or test parameters unless you are certain you understand the consequences of changing them.

In the Options Menu, use F2 to cycle through the various settings, press Enter to select a setting to adjust, and use F1, F2, F3 and Enter to adjust the setting. To return to the Main Menu press F3.

Using your TnP-500 with WinPATS Premium PC Software

The TnP-500 can be operated directly from a PC using our WinPATS Premium PC Software, including running tests, printing tags, creating reports and more. You can also upload your test results from the TnP-500 after a period of testing if you prefer. Whichever method you choose, you will need to connect your TnP-500 to your PC via the USB-A to USB-B cable provided. The USB-B port is located inside the storage compartment under the keyboard of your TnP-500.

A full user manual for WinPATS Premium can be accessed from our website:
https://www.wavecom.com.au/onlinesupport/desktop/WinPATS_Help.html

We recommend reading the user manual, in particular the Getting Started section, before you begin testing, to ensure you are comfortable with WinPATS Premium when you begin testing.

Using your TnP-500 with WinPATS Pro Android App

The WinPATS App can be used to control your tester, save your test results and generate reports. Detailed, step by step guides for using WinPATS Pro are available on our website - www.wavecom.com.au

Before using your tablet with WinPATS, you must set it up as per the manufacturers instructions, and connect it to the internet (via 4G or wifi). We also recommend that the tablet is fully charged before the first use.

Setup

Setting up the new WinPATS App is simple, but can take some time. We recommend setting up WinPATS before you need to use it on site. You will need to download "WinPATS Pro" from the Google Play Store onto your Android tablet. On our website, you can find a set of videos that will guide you through the various functions and features of the new WinPATS App. This guide will walk through setting up WinPATS and connecting to your tester.

Once you have downloaded the WinPATS App, open it and create up a 4 digit pin code. This will help keep your data secure.

Next, it's time to set up your Company Account. If your employer or organisation has an account already, you can log in straight away using the details provided to you. Otherwise, tap Register Company to set up your Company Account - you will be prompted to enable WinPATS' permissions - this allows you to use the full set of WinPATS features.

Now, fill in your details - a valid ABN is required to register a new company. You should use the address and contact details of your head office. Once your details are entered, check they are correct, then tap Register.

You will be sent a One Time Password to the email you entered in the previous step. This is used to verify your email address - enter the OTP to continue. This OTP is only valid for 10 minutes - if your OTP expires, simply go back and then tap 'Register' again. If you don't see your OTP email, check your spam folder.

Now you can pay for your WinPATS License. - you should have a coupon code on the rear of this booklet which provides you with one free license for the WinPATS App. Your coupon code is linked to your tester, and you will need to connect your Android tablet to your TnP-500 to authenticate your code. Using the USB-OTG cable supplied with your tester, connect your tablet to your tester in the following chain:

Tablet > USB-OTG > USB-A to USB B Cable > USB B port of your TnP-500 (located inside the storage compartment under the keyboard). See diagram below.

Then, enter your coupon code and tap APPLY. You should see the Total Amount number drop to zero. Tap PAY to proceed.

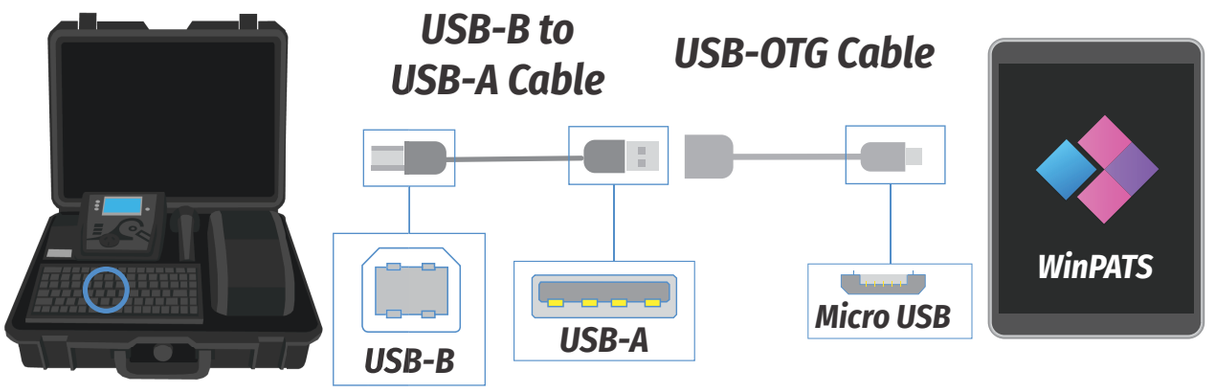

Once you have entered your code or paid, you can now Log In and set up your password. Enter the Company ID and temporary Password which was emailed to you, which will enable you to log in for the first time. You will now be prompted to set up a new password.
You can now set up your User Account - this is your individual profile. If you are the first or the only Test and Tag technician at your organisation, you should set yourself as an 'ADMIN' user, which will allow you to use the full features of WinPATS. Technician users have reduced access to features - this is designed for organisations with multiple technicians and/or multiple sites.

Once your details are complete, tap ADD to create your account. Confirm your details are correct, then tap CONFIRM to finish registering your user account.

When you start WinPATS for the first time you'll be required to perform a data sync. This creates a new cloud database for you, or connects your WinPATS App to your company's existing database. If your database has many items, this may take up to 5 minutes, but usually only takes a few seconds.

Connecting via Bluetooth

To control your TnP-500 via Bluetooth, you will need to perform a short setup procedure. Ensure you have both your tablet with WinPATS installed, and your TnP-500 in front of you.

Go to the Bluetooth settings in your Tablet's settings menu

Ensure that Bluetooth is enabled, then select your TnP-500 from the list of available devices (ensure you select the correct tester by referring to the serial number. Your TnP-500's serial number is located near the Power Socket, and on the rear cover of this booklet).

You may now be prompted to pair your two devices using a PIN code. If so, your TnP-500 will display a code on the screen. Enter this code into WinPATS and tap OK. You will be asked to confirm the connection - tap Confirm after checking the details are correct.

Note: If you have any issues with the PIN code, you can disable this function from the TnP-500 settings menu. Power on your TnP-500, then hold Enter and press F2 to open the settings menu. Navigate to 'Bluetooth Configuration' and press Enter. When prompted with 'Use Security PIN for Bluetooth' select 'Disable' by pressing F3.

Go to the WinPATS App

To connect your TnP-500, go to the Test menu in the WinPATS App (at the top of the screen). You should be prompted to connect a Wavecom Appliance Tester as soon as you open the Test Menu for the first time. Tap 'BLUETOOTH' to begin the Bluetooth setup process. WinPATS will scan for any available TnT or TnP testers and display them in a list - select your tester from the list by tapping it. If you see multiple TnT or TnP products in the list, use the serial number of your TnP-500 to identify your tester.

You will now be asked to register your TnP-500 - this allows you to receive product support, service and calibration reminders from Wavecom. Once complete, tap Register. You're now ready to start testing with WinPATS!

Connecting via USB

You can also connect to your TnP-500 via USB if needed. Follow the following diagrams to connect your TnP-500 to your tablet or PC, with or without your printer. Please note that you need to connect your printer in addition to your TnP-500 as shown.

Connecting your TnP-500 to your Tablet via USB

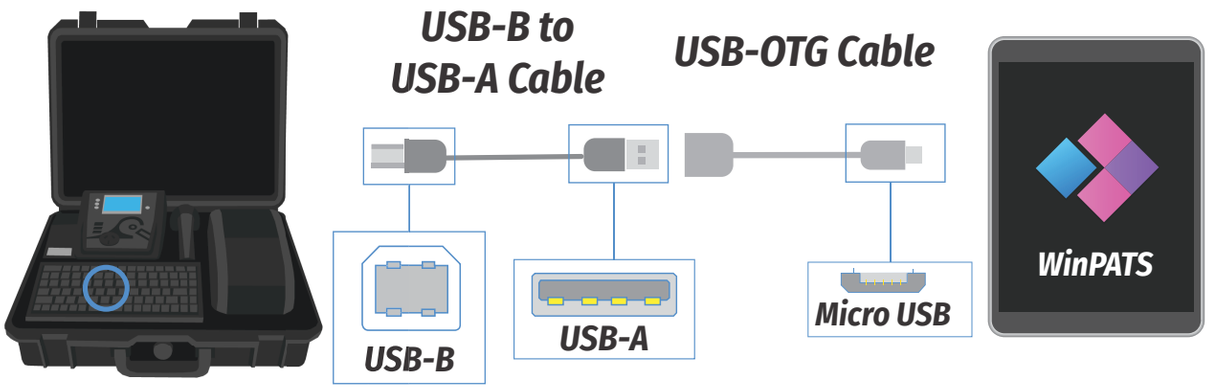

To connect your TnP-500 to your tablet via USB, you will need:

- A USB-A to USB-B cable (Included)
- A USB-OTG Cable (Included)

Connect your cables in the sequence shown below. Your TnP-500 USB-B port is located inside the storage compartment under the keyboard. Once connected, open WinPATS on your tablet. You should see the Test icon and the Print icon (if you connect the printer) at the top of the screen change to green.

Connecting your TnP-500 to your PC via USB

To connect your TnP-500 to your PC via USB, you will need:

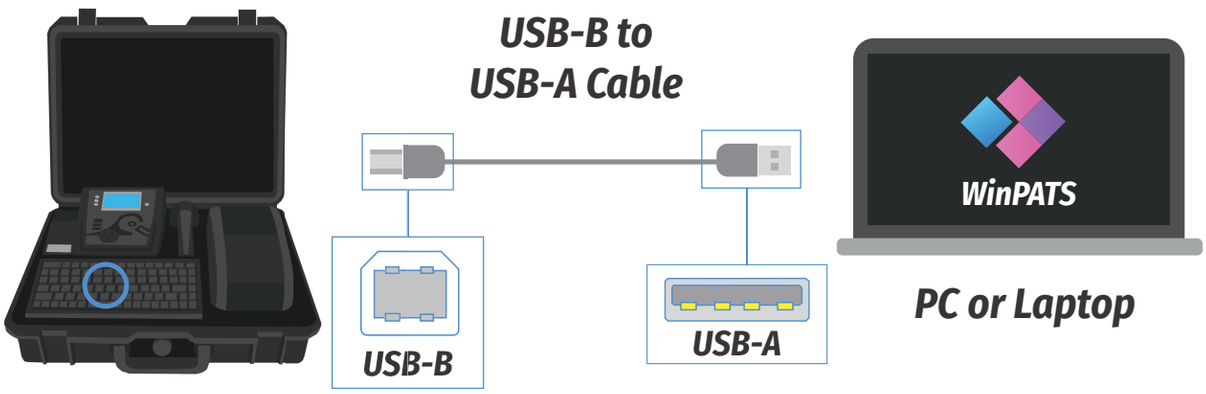

- A USB-A to USB-B cable (Included)

Connect your cables in the sequence shown below. Your TnP-500 USB-B port is located inside the storage compartment under the keyboard. You may need to update your USB Driver on your PC - you can download this driver from our website: https://www.wavecom.com.au/support_download-software.php

Using the TnP-500

The TnP-500 has a basic operating system that allows you to store User information, Sites and Items, as well as access this information to retest Items, and export this data via our WinPATS Premium software.

Adding a Site

```
<F1 SELECT SITE
  New Barcode

0000000      5000
```

The TnT can hold up to 16 sites. To save items and test results, you will need at least one Site added to the TnP-500's memory.
From the initial screen, press F1.
Don't hold the F1 key, this will select a different function.

```
  SITES 1 - 3
```

The TnT can hold up to 16 sites. Press Enter to scroll through your sites. 3 Site 'slots' will be shown at a time. Each site corresponds to an "F" key, for example Site 1 = F1. To add a new site or edit an existing site, hold the corresponding "F" key for 2 seconds.
*If the Site has a * symbol next to the name then the site was uploaded from WinPATS and needs to remain the same.*

```
 Edit Site 1
```

Using the keyboard, enter the name of the site. Once the details have been typed in press Enter to return.

```
  SITES 1 - 3
WAVECOM
```

Once a site has been entered, the 'F' buttons are used to select the site. For example to select site 1, F1 would be pressed.

```
WAVECOM
  New Barcode

0000000      5000
```

Once a site has been selected, the TnT will return to the initial screen and the site that was selected will be shown in the top left hand corner of the screen.

Adding a User

```
WAVECOM
  New Barcode

0000000      5000
```

The TnT can hold up to 6 Users To save items and test results, you will need at least one User added to the TnP-500's memory.
From the initial screen, press F2 to access the Users menu.
Don't hold the F2 key, this will select a different function.

```
  USERS 1 - 3
```

Press Enter to scroll through the Users. 3 Users will be shown on each screen. Each User corresponds to an "F" key, for example User 1 = F1. To add a new user or edit an existing user, hold the corresponding "F" key for 2 seconds.

```
 Edit User 1
GEORGE
```

Using the keyboard, enter the name of the site. Once the details have been typed in press Enter to return.

```
  USERS 1 - 3
GEORGE
```

Once a user has been entered, the 'F' buttons are used to select the user. For example, to select user 1, F1 would be pressed.

Adding an Item

```
WAVECOM
  New Barcode

0000000      5000
```

Type in the new barcode or press F3 quickly to auto generate a barcode number. Once a barcode has been specified, items can be entered. If the screen displays “search barcode” press Enter to switch to new barcode. There must be no numbers entered in to switch between the two modes.

```
 Loc|Desc|Make
```

A selection of details can be entered for an item. Details include; location, description, make, model, serial number, asset number, frequency of test and notes. Each heading relates to an ‘F’; e.g. Location = F1, Description = F2 and Make = F3. Only 3 items are displayed at one time. To scroll through the various details, press Enter.

```
 Loc|Desc|Make
OFFICE
LEAD
HPM
```

Please make sure that Location, Description, and Test Frequency are correctly entered.

Once the details are entered, hold Enter for 2 seconds to move on to the visual check screen.

```
      ALPHA MODE
```

Entering an items details is the same process as entering sites and users, please refer to the Adding a Site/User steps above. Ensure that test frequency for the item is set in accordance with the AS/NZS 3760:2022 Standard.

```
  VISUAL CHECK
30/03/2015 17:49
OTHER STATUS
FAIL         PASS
```

After the item, has been visually inspected, there is 1 of 3 options that can be selected; Out of Service (F2), Fail (F3) and Pass (Enter). If Out of Service or Fail is selected the result will be saved and the TnT will revert back to the barcode entry screen. If you have a zebra printer a tag will be printed.

If the test is a visual check only then hold Enter for two seconds - See below for details.

```
   Main Menu A
Earthed Test
D/Insulated Test
Ext Lead Test
```

If the item passes a visual inspection and pass is selected, testing can begin. Select the correct test based on the appliance type.

More detailed information regarding the testing process can be found from page 13.

```
INSULATION TEST
 500VDC   1 MOhms

              3s
```

Once test has been completed the results are displayed.

```
   WHAT NEXT?


RE-TEST      CONT
```

To test the item again, press (F3). This will take you back to the main menu A screen. From here you can choose a test class. You would use this for example if testing power boards. To complete the test, press enter. This will take you back to the new barcode screen. If you have a zebra printer, a barcode will be printed once (enter) is pressed.

Barcode Generation

```
WAVECOM
  New Barcode

0000000      5000
```

The TnT incorporates an auto generate barcode function which allows barcodes to be generated sequentially after a barcode has been specified, for example: the specified barcode is 1000 so the next barcode to be generated will be 1001, 1002, 1003 etc. This can be accessed by holding F3 for 2 seconds on the Barcode Entry screen.

```
BARCODE LENGTH:
Up       7 DIGITS
Down
ESC           SET
```

Once the auto generate menu has been accessed, the user can specify how many digits they want in the barcode. The auto generate function allows a minimum of 2 and a maximum of 7 digits in the barcode to be generated. To increase the number of digits in the barcode, press F1. To decrease the number of digits in the barcode, press F2. To proceed, press enter, or to return to the Barcode Entry screen, press F3

```
SET BARCODE:
    1000

ESC           SET
```

If Enter was pressed, the user can now set the barcode that will begin the sequence. Key in a barcode and press Enter to continue, or F3 to return the Barcode Entry screen.

```
  USE LEADING
     ZEROS

Enable   Disable
```

If Enter was pressed, the user can specify whether or not to use leading zeros in the auto generated barcode. For example: If the user selected 7 digits in the barcode and entered 1000 as the barcode, the barcode will be 0001000 if leading zeros are enabled. To enable leading zeros, press F3. To disable, press enter. The current barcode that will be generated is displayed in the bottom left hand corner of the Barcode Entry screen.

```
WAVECOM
  New Barcode

0001000      5000
```

The current barcode that will be generated is displayed in the bottom left hand corner of the Barcode Entry screen.

Visual Check Only

```
  VISUAL CHECK
30/03/2015 17:49
OTHER STATUS
FAIL         PASS
```

Items can be passed with a visual check only (no testing required). You must be at the visual check screen shown on the left. To do a visual check only press and hold Enter for 2 seconds.

```
  VISUAL CHECK
      ONLY?
  SAVE AND EXIT
YES           NO
```

Pressing (enter) will take you back to the visual check screen. Pressing (F3) will complete the test. Print out a tag if you have a zebra printer. Then go back to the new barcode screen.

Deleting Items

```
WAVECOM
 Search Barcode

0000002      4995
```

From the search barcode screen press and hold the Enter key. Then press the F1 key. The feature cannot be selected when new barcode is displayed.

```
WAVECOM
 S/Records Del.

0000001      4999
```

The search barcode will change to S/Record Del.
Scan or type the barcode that needs to be deleted. If the record does not exist or is in the wrong site a message will be displayed saying nothing was found.

```
 Delete Record?
    0000000
 Hold F3 to Del.
DELETE       QUIT
```

When a match is found a last warning message will be displayed. To delete the record hold the F3 key for 2 seconds. To cancel press Enter.

Retesting Items

```
WAVECOM
 Search Barcode

0000001      4999
```

Type in or scan the barcode number to be searched and press enter. If the screen displays new barcode press Enter to switch over. The screen can only be switched if there is no entry.

```
 Loc|Desc|Make
OFFICE
LEAD
HPM
```

The existing record details will be shown. Any changes made here will be updated once the site is downloaded in WinPATS. If nothing needs changing, hold the Enter key to proceed to the next screen.

```
  VISUAL CHECK
30/03/2015 17:49
OTHER STATUS
FAIL         PASS
```

After all item details have been entered, hold the Enter key for 2 seconds to proceed to the Visual Check screen. After the item has been visually inspected, there is 1 of 3 options that can be selected; Out of Service (F2), Fail (F3) and Pass (enter). If Out of Services or Fail is selected the result will be saved and the TnT will revert back to the barcode entry screen, and a tag will be printed.

```
   Main Menu A
Earthed Test
D/Insulated Test
Ext Lead Test
```

If the item passes a visual inspection and pass is selected, testing can begin.

```
INSULATION TEST
 500VDC   1 MOhms

              3s
```

Once test has completed the results are displayed.

```
   WHAT NEXT?


RE-TEST      CONT
```

To test the item multiple times press (F3) this will take you back to the main menu A screen. From here you can choose a test class. You would use this for example if testing power boards. To complete the test press (enter). This will take you back to the search barcode screen. If you have a zebra printer a barcode will be printed once (enter) is pressed.

Reprinting a Tag without Retesting

```
WAVECOM
 Search Barcode

0000002      4995
```

From the search barcode screen, enter barcode to search (From settings, advanced search options can be enabled). Select the Select the record. Press and hold Enter till screen with Loc | Desc | Make, press Enter, Model | SN | Asset, Press Enter one more time to bring Freq | Notes | Tests

```
Freq|Notes|Tests
1 Years

1 Tests
```

The search barcode will change to S/Record Del. Scan or type the barcode that needs to be deleted. If the record does not exist or is in the wrong site a message will be displayed saying nothing was found. Press F3

```
  Review Tests
Re-print Label
24/04/2015   PASS
```

Press re-print the label.
Use Esc key to get back to previous menu when printing is done

TnP-500 Testing Menu – Main Menu A

Class 1 - Earthed Appliance Test - Menu A - F1

The Class 1 Test completes the following sequences as part of its procedure:

- Integrated Supply Mains Test - Refer to Integrated Test section
- Integrated NCNT Test - Refer to Integrated Test section
- Earth Bond Test (@ 200mA): 200mA test current, pass level less than 1Ω
- Insulation Test (@ 250V or 500V): pass level greater than 1MΩ

Note: 250V insulation testing applies to Class 1 appliances if selected (refer to Technical Information for details to change test voltage).

In some situations, if the DUT is labelled with "Surge Protection Fitted" or if it contains MOV's (Metal Oxide Varistors), conduct a 250V-insulation test. If unsure refer to the AS/NZS 3760:2022 Standard. Should it still fail, remove it from service. (Refer to the Technical Information section to change test voltage).

Note: Ensure that the device is isolated from any ground loop.

Procedure:

1. Complete a Visual Inspection (see page 22). If the device passed the Visual Inspection, continue with the following instructions.
2. Plug device into appliance test socket.
3. Plug the IEC Clamp Cable into the IEC socket of the TnP-500
4. Connect earth clip to any exposed metal on the device. If this is not possible, you can use a metal mesh braid to establish an earth connection (sold separately)
5. Navigate to Main Menu A, then Press the F1 key to begin the test
6. The test will be conducted
7. Once complete, read and record results appropriately

If the result was a PASS - Tag with PASS tag showing "next test due" date and return the device to service.
If the result was a FAIL - Tag the DUT with a DANGER tag and remove the device from service.

Class 2 Test - Double Insulation Test – Menu A - F2

The Double Insulation Test completes the following test sequences as part of its procedure:

1. Integrated Supply Mains Test - Refer to Integrated Test section
2. Integrated NCNT Test - Refer to Integrated Test section
3. Double Insulation Test (@250V or 500V): pass level greater than 1MΩ

Procedure:

1. Complete a Visual Inspection (see page 22). If the device passed the Visual Inspection, continue with the following instructions.
2. Inspect the compliance plate to ensure the appliance is a Class 2 appliance. Look for the double insulated symbol, seen here.
3. Plug the appliance into the appliance test socket of the TnP-500
4. Navigate to Main Menu A, then Press the F2 key to begin the test
5. Read and record results appropriately

If the result was a PASS - Tag with PASS tag showing "next test due" date and return the device to service.
If the result was a FAIL - Tag with a DANGER tag and remove the device from service.

Note: In some situations, if the device is labelled with "Surge Protection Fitted" or if it contains MOV's (Metal Oxide Varistors), conduct a 250V-insulation test. Always read the compliance plates before testing, especially on surge protected powerboards. If unsure always refer to the AS/NZS 3760:2022 Standard. Should it still fail, remove it from service.

Lead Test (Extension Lead Test) – Menu A - F3

Note: Extension leads should always be uncoiled before using or testing. Please ensure that the IEC Adaptor & the IEC socket are inserted firmly or it may result in a continuity/polarity fail.

The Lead Test completes the following sequence as part of its comprehensive testing procedure:

1. Integrated Supply Mains Test - Refer to Integrated Test section
2. Earth Bond Test (@ 200mA): 200mA test current, pass level less than 1Ω
3. Insulation Test (@ 250V or 500V): pass level greater than 1MΩ
4. Continuity and Polarity Test 240VAC @ 2mA Checks continuity & polarity of leads

Procedure:

1. Complete a Visual Inspection (see page 22). If the device passed the Visual Inspection, continue with the following instructions.
2. Plug in the IEC-550 Orange Lead adaptor lead supplied into the IEC socket.
3. Plug male end of extension lead or power board into the appliance test socket.
4. Connect the IEC-550 Orange lead to your extension lead
5. Navigate to Main Menu A, then Press the F3 key to begin the test
6. Read and record results appropriately.

If the result was a PASS - Tag with PASS tag showing "next test due" date and return the device to service.
If the result was a FAIL - Tag with a DANGER tag and remove the device from service.

TnP-500 Testing Menu – Main Menu B

Use the Enter button to switch between Menu A and Menu B. All tests on Menu B require a Mains Power source.

Power Test - Menu B – F1

The Power Test is for the purposes of monitoring and performance of equipment. The Power Test feature is for single phase appliances only. The Power Test allows the user to turn the appliance on and measure its performance as a digital wattmeter.

Displayed parameters are:

- Volts AC
- Current
- Volt Amp
- Power Factor
- Watts

This test is ideal for service agents and electricians. The user can plug in the appliance and turn it on with real time measurements displayed on the display. This is useful when testing an appliance with a compliance/ name plate on it. The operator can compare the name plate details of operating voltage, operating current, and power factor etc. Should the appliance exceed the said values on the name plate it could be deemed faulty and require service.

The Power Test completes the following sequence as part of its comprehensive testing procedure:

1. Integrated Supply Mains Test - Refer to Integrated Test section
2. Power Test

Caution: Before operating ensure the equipment is firmly secured to eliminate the possibility of causing injury or damage. This function will power the appliance on, and in the case of appliance with movable parts these parts may begin to move. Ensure the appliance can power on safely before proceeding.

Procedure:

1. Complete a Visual Inspection (see page 22). If the device passed the Visual Inspection, continue with the following instructions.
2. Ensure the appliance is safely located and secured, as it will be powered and operational during this test.
3. Plug male end of appliance into Appliance Test Socket.
4. Press F1 to start the power test.
5. A warning message will appear on screen. If the appliance is safely located and secured press F3 to proceed. The unit will power on.
6. Read and record results appropriately.
7. Once the appliance has powered down and the test is complete, unplug the unit.
8. Press Enter to return to the main menu.

Note: Because the power test is not required in the electrical testing standards there is no pass/fail value built in to the tester. It is up to the user to determine if the item is a pass or a fail based on the compliance/name plate.

If the result was a PASS - Tag with the appropriate tag including “next test due” date and “return to service”.
If the result was a FAIL - Tag with a DANGER TAG and remove the unit from service.

Leakage / Run Test – Menu B – F2

The Leakage Test is an alternate method to perform insulation resistance tests. Leakage testing is a major function of the TnP-500. There are three types of Leakage test available on the TnP-500 - take care to ensure you use the correct test for your appliance.

This test determines errors of leakage not otherwise detected in a normal insulation test. If there are any doubts with insulation testing of the equipment, the Standard (AS/NZS 3760:2022) allows for a leakage test to be carried out instead. The TnP-500 has been designed to perform these tests. The Leakage Test applies power to the Device Under Test (DUT) and measures any imbalance or leakage current. The leakage is tested to the limits of the class types specified in the Standard AS/NZS 3760:2022 i.e. Class 1 = > 5mA as Fail.

The limit of imbalance measured on the TnP-500 will read well in excess of the limits set in mA. However, should the supply circuit be protected by an RCD this device will trip anywhere between 10 to 30mA and trip the mains supply switch OFF. The Leakage Test allows the user to operate the appliance in normal operation conditions and measure its Operating Leakage current. The displayed parameter is mA. The mA Display Range 0.0 to 22.0 mA.

A predefined value for individual class types is programmed into your TnP-500. These limits are set according to the AS/NZS 3760:2022 Standards. Should these values change in future it can be simply altered in firmware. The run time period can be adjusted (by 5 second increments). The value can be changed by selecting the leakage test time in the options menu. See the special functions section of the manual for more details. The factory default setting is 20sec. The value for the leakage runtime is also used for the power test.

Caution: Before operating ensure the equipment is firmly secured to eliminate the possibility of causing injury or damage. This function will power the appliance on, and in the case of appliance with movable parts these parts may begin to move. Ensure the appliance can power on safely before proceeding.

Procedure:

1. Complete a Visual Inspection (see page 22). If the device passed the Visual Inspection, continue with the following instructions.
2. Ensure that the appliance is safely located and secure as it will be powered & operational during this test.
3. Plug the appliance into the Appliance Test Socket of the TnP-500
4. If testing a Class 1 Appliance, plug the IEC Clamp Cable into the IEC socket of the TnP-500, then clamp it onto earthed metal on the appliance
5. If testing an RCD, plug the IEC-550 Orange Cable into the IEC socket of the TnP-500, then plug it into a socket on your RCD and turn that switch on
6. Navigate to Main Menu B, then press F2 to enter the Leakage Test Menu
7. Press a function key to start the test
   F1 = Earth Leakage, limit set to MAX then 5mA fail
   F2 = Double Insulated Leakage and Extension Leads, limit set to MAX then 5mA fail
   F3 = RCD Leakage (not a full RCD Trip Time or Ramp Test)
8. The TnP-500 will conduct the first part of the test without powering the appliance
9. A warning will be displayed on screen - ensure the appliance is safely located, then press F3 to power the appliance and continue the leakage test
10. Your results will appear on the screen - you can now print the tag and unplug the appliance

If the result was a PASS - Tag with the appropriate tag including “next test due” date and “return to service”
If the result was a FAIL - Tag with a DANGER TAG and remove from service.

RCD Tests – Time Test / Ramp Test– Menu B – F3

Before Testing

When any RCD testing is to be carried out on any circuit that is protected by an RCD in the main switchboard (upstream), it's most likely to trip this upstream RCD. When performing RCD Trip Time or Ramp current tests on any portable RCD devices, the RCD in the switchboard may trip faster. This is due to increased upstream levels of leakage current from the additional circuits and devices connected to it. The fixed RCD's may also have better connectivity, sensitivity and mechanical mechanisms.

To avoid tripping large areas in the work place monitored by the switchboard RCD it is suggested that an Isolation Transformer be used. Wavecom offer an Isolation Transformer, designed specifically for the purposes of field RCD tripping. Do not use these transformers for any other purpose. Rated 240VAC In, 240VAC Out @ 30VA. Fuse protected, Primary Winding 500mA.

Types of RCD

There are two types of RCD - Type 1 and Type 2:

Type 1 - Has a trip time of < 40mS and a trip current of < 10mA. These types of RCD's are mainly used on sites containing medical equipment. These types of RCD's must be compliant with the AS3551 standard. (Please refer to AS3551 for specific guidance)

Type 2- Has a trip time of < 300mS and a trip current of < 30mA. This is the default setting on all new units. Unless specified on the RCD device, nearly all RCD will be this type, however as with all electrical testing, take care to confirm the RCD type before testing.

RCD Testing Setup

When testing RCDs, different kinds of RCDs will require different test setups. Consult the diagrams below to determine which setup is required for your situation. Note the presence of the Isolation Transformer between the Portable RCDs and the GPO. This ensures any switchboard RCDs are not tripped when testing Portable RCDs.

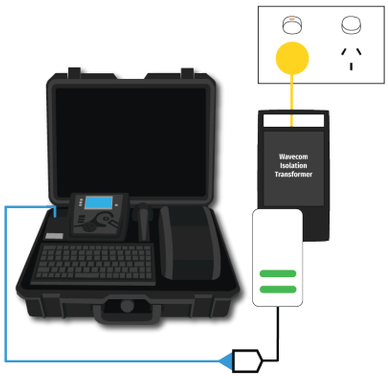

Testing Portable RCDs with no physical switch

Connect in series:
Blue Power Cable from TnP-500 IEC Power Socket to RCD, to Isolation Transformer, to GPO

Testing Portable RCDs with physical switches

Connect in series:
Blue Power Cable from TnP-500 IEC Power Socket to RCD, to Isolation Transformer, to GPO.
Ensure the RCD socket is switched on.
Repeat for each outlet on RCD.

Testing Fixed RCDs

Connect Blue Power Cable from TnP-500 IEC Power Socket directly to GPO.

RCD Trip Time Testing:

This test is designed to trip RCD devices at a fixed current and to determine the trip time of the RCD device. During an RCD Trip Time test, the TnP-500 injects a true fault current value using a real-time compensation calculation of the actual voltage at the time of test, delivering a true and accurate trip current. The TnP-500 will measure the time the RCD takes to trip in milliseconds, and display it on the screen. This function is factory set to 30mA for fast testing, but the user can set the current to x0.5, x1.0 or x5.0 using the RCD Multiplier.

For example:
30mA * 0.5 =15mA
30mA * 1.0 = 30mA - This also is effective on any set test current of the RCD tester from 5mA to 500mA output.
30mA * 5.0 = 150mA
These tests should result in no-trip, trip & fast trip times respectively.

To enter the RCD menu from Main Menu B, press the F3 button. Then, to set up a Trip Time Test, press F1. Before performing an RCD Trip Time Test, the TnP-500 should be configured to ensure an accurate result.

RCD Test Options:
To adjust the Trip Time test options, press F3 . This allows the user to set the trip current level, 5mA to 500mA. The RCD type can also be select here depending whether the unit is a Type I or Type II RCD. From the options menu, press F2 to change the current level and F3 to change the RCD type.

Adjusting the current level:
The TnP-500 displays and maintains the last set trip current value. If the user wishes to change the value of the trip current the following steps enable the changes. Press F2 from the options menu to display test current.

F1 - Raises the trip current in 1mA increments to 500mA. Hold the button and the value will scroll faster the longer it is pressed. Once 500mA limit is reached the value will then loop over and start again from 0mA

F2 - Decreases the trip current in 5mA increments. Hold the button and the value will scroll faster the longer it is pressed. Once 0mA limit is reached the value will then loop over and start again from 500mA.

Enter - Sets the selected current for the next trip time test. The TnP-500 will then return to the current trip time test screen.

Changing RCD Type:
Depending on the RCD, the RCD type needs to be selected from the options menu. These options change the pass / fail values when performing RCD tests. Please make sure that you have the correct RCD type selected.

F1 - Sets RCD Type to Type 1
F2 - Sets RCD Type to Type 2

You will be promoted to enable or disable Portable RCD (PRCD) testing - unless you are testing a switchboard RCD, turn PRCD on.

Conducting the Trip Time Test

1. Complete a Visual Inspection (see page 22). If the device passed the Visual Inspection, continue with the following instructions.
2. Navigate to Main Menu B, and press F3 to enter the RCD Menu, then press F1 to select Time Test
3. Press F3 to enter the Time Test options menu, to ensure your TnP-500 has the correct settings for the type of RCD (cont...)

4. (cont...) Once your TnP-500 is set up correctly, select either the 0° (Positive) or the 180° (Negative) Phase to test. Both phases should be tested, and after the first test, you can select 'Retest' to test the other phase.
5. When ready, press F3 to begin the test - the RCD will trip, and the time will be recorded in milliseconds.
6. The TnP-500 will display results for 5 seconds after the RCD is tripped, using a small internal 300mAh battery. If the RCD (and therefore Mains Power Supply) is not reset by the time unit loses power, then the result will be displayed when power is back on. Once the TnP-500 is powered back on by resetting the RCD, you can press Enter to continue or F3 to retest.
7. You can now retest the other phase of the RCD, or simply print your tag and record your results.

RCD Ramp Testing

This test is designed to trip RCD devices using a ramping up current value, to determine the trip current of the RCD device. This useful test allows the user to determine circuit leakage load/pre-loading of RCD circuit. This can assist in determining nuisance tripping issues (ie. if the RCD is too sensitive) or determining RCD performance if suspected faulty or inconsistent in performance. The TnP-500 has a nominal leakage current of 2mA, which should be added to the result of test.

E.g. if RCD tripped at 22mA, add 2mA to get a value of 24mA trip current.

To enter the RCD menu from Main Menu B, press the F3 button. Then, to set up a Ramp Test, press F2. Before performing an RCD Ramp Test, the TnP-500 should be configured to ensure an accurate result.

Changing RCD Type:
Depending on the RCD, the RCD type needs to be selected from the options menu. These options change the pass / fail values when performing RCD tests. Please make sure that you have the correct RCD type selected.

F1 - Sets RCD Type to Type 1
F2 - Sets RCD Type to Type 2

You will be promoted to enable or disable Portable RCD (PRCD) testing - unless you are testing a switchboard RCD, turn PRCD on.

Conducting the Ramp Test

1. Complete a Visual Inspection (see page 22). If the device passed the Visual Inspection, continue with the following instructions.
2. Navigate to Main Menu B, and press F3 to enter the RCD Menu, then press F2 to select Ramp Test
3. Press F2 to select your RCD Type, and turn Portable RCD testing on or off
4. Press F3 to begin the test - the TnP-500 will increase the current to the RCD until it trips, displaying the current on screen.
5. The TnP-500 will display results for 5 seconds after the RCD is tripped, using a small internal 300mAh battery. If the RCD (and therefore Mains Power Supply) is not reset by the time unit loses power, then the result will be displayed when power is back on. Once the TnP-500 is powered back on by resetting the RCD, you can press Enter to continue or F3 to retest.
6. You can now print your tag and record your results.

Meter Mode®

Meter Mode Features

Electrical parameters are displayed as Volts, Amps, Watts, and Volt / Amps. These electrical parameters will be displayed on the Testers main screen display. Select from the 4 Test available in Meter Mode.
Meter Mode measures and displays volts in AC, Current in Amps, Power Measurement in Watts and VA in Volt/ Amps

Typical Applications

- Measuring the Power of a bar heater, or electric power drill
- Check appliance ratings and compare them to that on the compliance plate
- Quick test of Power outlet Voltages in rooms or locations split from multiple circuits.

How to use Meter Mode

1. Conduct a visual inspection, and inspect the compliance plate to determine the expected results
2. Plug in the appliance to the appliance test socket on your TnP-500.
3. Ensure the appliance is safely located and secured, as it will be powered during this test.
4. Press and Hold F3 to enter Meter Mode
5. When ready, press F3 to begin Meter Mode, then press F3 to power the appliance.
6. Press F3 to scroll through the options (Volts, Amps, Watts & Volt/Amps in that order)
7. To end Meter Mode, simply press Enter, then to leave Meter Mode and return to the Menu, press Enter again. The TnP-500 will stay in Meter Mode when powered off

Explanation of Electrical Parameters

Volts

A volt is the unit used to measure the energy available in the electrical current of a circuit. Voltage controls the available electrical power (wattage).

Amperes (aka Amps)

An amp is the unit used to measure electrical current as it flows past a specified point.

Watts

A watt is the unit used to measure the amount of actual flowing electrical energy.

Volt-Amps

A volt-amp is the unit used to measure the apparent electrical power used by computing equipment. Mathematically, it is expressed as volts times amps (V*A). Because it represents the amount of energy computing systems may draw from a power grid, Volt-Amp measurements are used to determine the kind of wiring and circuit breakers required to support the computing equipment in question.

Watts and VA - Detailed Explanation

The power drawn by equipment is expressed in Watts or Volt-Amps (VA). The power in Watts is the real power drawn by the equipment. Volt-Amps are called the “apparent power” and are the product of the voltage applied to the equipment times the current drawn by the equipment. Both Watt and VA ratings have a use and purpose. The Watt rating determines the actual power purchased from the utility company and the heat loading generated by the equipment

Disclaimer

Meter Mode is to be used for quick simple indicative electrical parameter measurements. Providing reasonably accurate readings without the need to carry any other instruments. It is not intended to replace specific, more accurate individual test equipment, nor is its purpose to replace prescribed testing requirements. It in doubt please consult a qualified electrician when unsure or perform proper test procedures.

TnP-500 Specifications

Mains Supply Test

Checks Polarity and continuity of mains supply by LED indicators (A-N, A-E, and N-E). (Flashing red LED indicates test fail)

Class 1 Earthed Appliance

Appliance Check: Ensures appliance is plugged in and turned on.
Earth Bond Test: 200mA test current. Pass level Less than 1.0 Ω. Measurement: 0.01Ω to 10 Ω.
Insulation Test: 500VDC / 250VDC. Pass level Greater than 1M Ω. Measurement: 0.1Ω to 10MΩ. *See also Leakage Test

Class 2 Double Insulated Appliance

Appliance Check: Ensures appliance is plugged in and turned on.
Insulation Test: 500VDC / 250VDC. Pass level greater than 1MΩ. Measurement: 0.1Ω to 10MΩ. *See also Leakage Test

Extension Leads

Earth Bond Test: 200mA test current. Pass level Less than 1Ω. Measurement: 0.01Ω to 10.0Ωs
Insulation Test: 500VDC / 250VDC. Pass level Greater than 1MΩ. Measurement: 0.1Ω to 10.0MΩ.
Continuity/Polarity Test: 250VAC check continuity and polarity of leads. Displays Pass/Fail.

Leakage Test

Leakage Current: 0 to 30.0mA at 200 to 265V
Earth Leakage Test: 240VAC Mains. Pass level 1, 2.5, 5.0 mA leakage test levels with up to 10 Amp load operation
Note 1: Pass level for CLASS 1 is 5 mA; pass level for CLASS 2 is 1 mA
Note 2: Leakage test may be performed if for any reason a standard CLASS 1 or CLASS 2 is not possible.

RCD Test

Trip Current: 2 to 500mA in 1mA steps. User selectable.
Trip Time: 0 to 3,000ms at .001sec resolution.
Current Ramp Trip Test: 0 to 500mA in 1mA increments.

Power Measurement

Leakage Current: 0 to 30.0mA at 200 to 265V
Load Current: 0.0 to 10Amp
Voltage: 200 to 265VAC
Power Factor: 0.00 to 1.00
Apparent Power: 0 to 2400VA
Power: 0 to 2400W

Meter Mode®

Green flashing LED denotes MM is engaged
Load Current: 0.0 to 10Amp
Voltage: 200 to 265VAC
Apparent Power: 0 to 2400VA
Power: 0 to 2400W

Technical Information

Visual Inspection

Visual inspection has to be done before any other test is carried out using any of the range of TnP-500 appliance testers.

The visual inspection is carried out to ensure there are no physical faults with the appliance before testing. The following list is an example of potential physical faults, but it is not exhaustive and the relevant standards must be consulted to ensure a proper Visual Inspection is undertaken.

- There is no damage or component defects to the accessories, plugs, outlet sockets or connectors (physical).
- There are no cracks or abrasions.
- There are no exposed inner cores or conductors (flexible) and the supply cords are not twisted or distorted.
- Any Fuse/Overload protection components (if fitted) are checked.
- All labels, markings and warning indicators (of the maximum load to be connected to the device) are legible and intact.
- The insulation is not damaged in any way i.e. melted, cuts or abrasions. There are no iron filings in the insulation. There is no insulation tape on the lead.
- Any flexible cords and/or leads are effectively anchored (glands and grommets intact).
- All covers or guards are in place and secure as intended by the supplier/manufacturer.
- All safety devices and systems are in good working order. (i.e. overload latches & buttons).
- No dust or dirt obstructs any exhausts or ventilation outlets.
- All controls are working properly and are secure and aligned.

Important - If Result is a Fail:
If any Equipment fails **ANY** of the above, it should be deemed to have **FAILED** the Visual Test, and therefore no other tests need be performed. If this is the case the Equipment should be tagged with a DANGER TAG and removed from service. **It is recommended by the manufacturer and distributor of this product that it SHOULD NOT BE RETURNED TO SERVICE. To do so would be considered unsafe.**

Class 1 (Earthed Appliance) Construction
Single basic insulated and protectively earth equipment

This type of product design provides two safety barriers between all live conductors at dangerous voltages and the equipment user. The provision of basic insulation between exposed metal parts and live parts is the first barrier to provide basic protection against electric shock. The second safety barrier is by the connection of exposed (accessible) conductive (metal) parts to the protective earthing conductor (earth wire) in the fixed wiring of the device/Installation.

The protective earthing terminal of the equipment must be marked with the word “earth” or the symbol “E” or the symbol for Earth Terminal or Protective.

To perform this test, a continuous earth loop must be made between the exposed conductive material (metal) and the TnP-500 appliance tester. This is done by means of connecting the earth lead with the crocodile clip/probe attached to a GOOD earth point (paint & coatings will not provide effective connections) and the appliance plugged into the TnP-500 appliance testers’ test socket. The Maximum allowable limit is less than 1.0Ω.

Class 2 (Double Insulated) Construction

Double insulated equipment

This method of construction employs two safety barriers comprising two layers of insulation between dangerous voltages and the user of the equipment.

The first layer of insulation is formed around the live conductor and is termed 'the Functional Insulation'.

The second layer of insulation is termed 'the Supplementary Insulation'. In Class II equipment, protection against electric shock does not rely on basic insulation only, but has additional supplementary insulation such as double insulation or reinforced insulation provided, there being no reliance on precautions in the fixed wiring of installation.

Class II equipment is marked with the words "DOUBLE INSULATION" or the symbol: 

For double insulated under Safety Symbols:
Note 1 – Double Insulation is insulation comprising both basic and supplementary insulation.
Note 2 – Reinforced Insulation is a single insulation system with a degree of protection against electric shock, which is equivalent to double insulation.

Testing of Electrical Equipment

Many testing personnel have some reservations in testing sensitive electronic equipment using a 500V DC insulation test. There is a perceived fear of causing internal damage from over voltage. With the TnP-500 these concerns are alleviated.

The TnP-500 can safely test electronic equipment as the tests are carried from Active-Neutral (shorted by a relay inside the tester) to Earth. In this mode no dangerous voltages pass through to the internal components of the appliance, or Device Under Test ('DUT'). If these tests are done using an Insulation Tester and the user tests Active to Neutral, this could potentially cause damage.

Some changes may be required in certain configurations where fitted surge protection devices (MOV's) in the DUT may cause a failed test result. Applying 500V in this these situations can cause the surge protection devices to trip, therefore conducting the applied voltage to earth, thus showing a failure of insulation. In these instances the test voltage should be changed to 250V, then the DUT should be retested. If the DUT still fails, check with the DUT Operators' Manual or an electrician. (for details see - 'Double Insulation Test' 250/500VDC to change test voltage).

Under these circumstances, it would be difficult for any damage to occur to either the surge protection device or the DUT, as there is insufficient current generated by the TnP-500.

Leakage Test

If there are any doubts with insulation testing of the equipment, the AS/NZS 3760:2022 standard allows for an alternative test method; a Leakage Test can be performed instead. The TnP-500 is designed to perform these tests.

NOTE: 10Amps Maximum Resistive Load only

A Leakage Test applies power to the Device Under Test (DUT) and measures the imbalance of leakage current from the DUT between the active and neutral conductors. The leakage is tested to the limits specified in the standard and a Pass/Fail result as well as a digital reading is provided to ensure that the user gains as much information as necessary.

Earth Continuity Test - Commonly called Earth Bond Test

Note: Part of normal (Class 1 test) procedure. Use supplied IEC–Alligator Clip lead or optional accessory 'WCM-Probe kit'.

The TnP-500 conducts earth continuity tests at Approx. 200mA. Continuity tests at higher currents are not required or recommended on certain equipment as this may cause severe damage or premature failure to the Device under test (see AS/NZS 3760:2022).

Unique Earth Bond Test Feature

The Earth Bond test duration can be controlled by the user by pushing the ENTER button during the test. This will extent the test time by 30 seconds. The TnP-500 will then add 30 seconds to the test time for each additional time you press ENTER. This feature has been incorporated to provide extra time to achieve an adequate physical connection, or confirm any possible INTERMITTENT issues. There may be situations where the condition of equipment, coatings applied, or suspect wiring breaks may alter the earth connection path of the device under test. This may save time by prolonging tests instead of conducting multiple iterations of the same test.

3 Phase Testing

Note: 3 Phase Testing requires a three phase adaptor, sold separately. The TnP-500 cannot perform a 3 Phase Leakage test.

3 Phase appliances can be tested by the TnP-500 appliance testers. As the insulation tests are from Phase to Earth, only a 500V insulation test is required. This test may be carried out by using the optional adaptor 'WCM-3PH-MADP' [See 'Optional Accessories' for details.]

To change the test voltages, when in Main Menu A; Press Enter and F2 together to view the Settings menu. Select "Change Insulation Vol" and press enter. Select either 250V or 500V. TnP-500 defaults to 500VDC, and will revert back to that when restarted.

Mains Supply Test

Your TnP-500 checks the polarity and connectivity of the mains supply power and displays this information via the LED Indicators. Each LED represents a comparison of the voltages between the Neutral to Earth, Active to Earth, and Active to Neutral respectively.

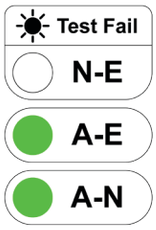

If the A-E & A-N (green) lights are on and the N-E (red) light is off, the Mains Supply Test has passed and you can continue with your testing.

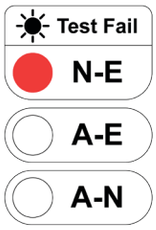

If the central N-E light is on (red) there is a voltage difference between the Neutral and Earth, or if there is no Earth connected to the TnP-500 supply (which is likely to occur when working with a generator or inverter).
DO NOT PROCEED if the N-E light is on and you intend to conduct load/leakage tests. If you are carrying out standard Insulation and Earth Bond tests, it is generally safe to continue.

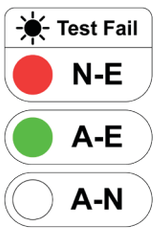

If both of the N-E (red) & A-E (green) lights are on, consult a qualified Electrician. This indicates a fault with the Mains Supply. DO NOT PROCEED with any testing on this Mains Supply.

No Connection No Test (NCNT)

This test function ensures that the appliance is plugged into the TnP-500 and that it is switched on. If the device is not plugged in and the TnP-500 detects that no device is present, and prompts the user to plug in an appliance to continue the test or press 'QUIT' to return to the main menu.

If for some reason the NCNT circuit does not detect the device but it is actually plugged in and turned on, the operator will need to override the NCNT function.

To override the NCNT function press F3 - This is done with User Discretion.

With an emphasis in the Standard AS/NZS 3760:2022 for carrying out the live testing the TnP-500 appliance testers will indicate for you to check if the device is plugged in and switched on. If the device is not plugged in and/or recognised, it may require a live test therefore making it necessary for the operator to carry out a full functional Leakage Test.

This function is to ensure that correct testing procedures are carried out in accordance with the Standard AS/NZS 3760:2022.

*Optional
Note: When using 3-Phase adaptors the NCNT function will need to be over ridden by pressing the 'OK' key prior to the TnP-500 performing the assigned test. Some single-Phase appliances controlled by contactors will also require manual over ride. In some instances, holding the 'ON' button will enable the NCNT function to work normally.

Wavecom Thermal Transfer Printer

Your TnP-500 comes with an integrated Thermal Transfer Printer - the TT-040-50. The TnP-500 printer is ready and fully set up to use out of the box. We can also provide logo artwork for fully customised tags.

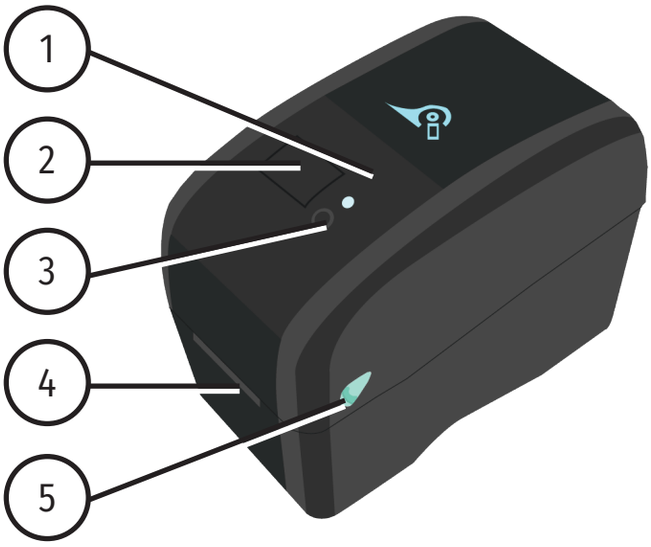

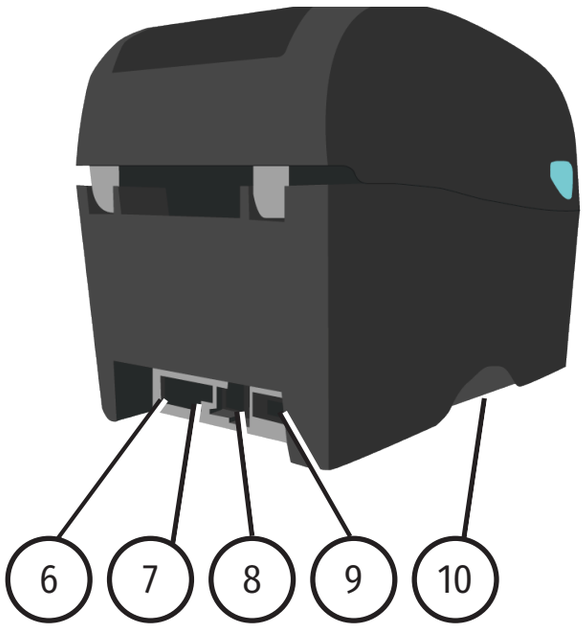

1. LED Indicator
2. Media view window
3. Feed Button
4. Label Exit Chute
5. Top Cover Release Lever
6. Power Switch
7. Power Socket
8. USB Interface
9. RS-232C Interface
10. SD Card Slot
11. Ribbon Rewind Hub
12. Print Head
13. Ribbon Rewind Gear
14. Ribbon Supply Hub
15. Gap Sensor (Receiver)
16. Gap Sensor (Transmitter)
17. Platen Roller
18. Black Mark Sensor
19. Media Guide
20. Media Guide Adjuster Knob
21. Media Holders
22. Top Cover Hinge
23. Top Cover
24. Ribbon Access Cover

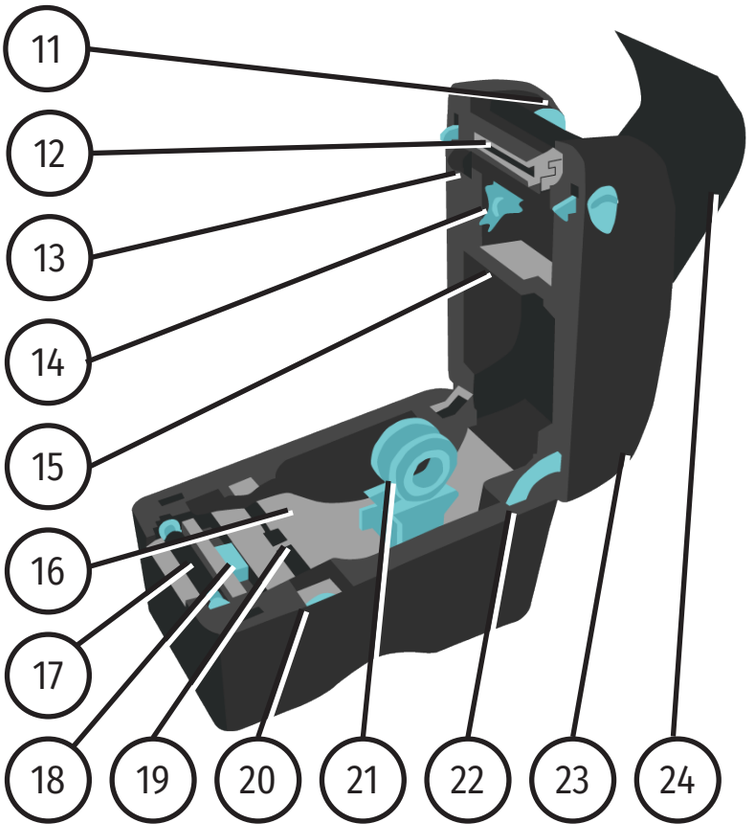

Loading the media

Loading media into the TT-040-50 Printer is quick and easy. To begin, open the printer top cover by pulling the tabs located on each side towards the front of the printer, and then lift the top cover to the maximum open angle.

1. Separate the Label Holders by gently pulling them in opposite directions

2. Insert the media between the label holders as shown

3. Using the Media Guide Adjuster Knob, adjust the Media Guide until it is flush but not tight against the media.

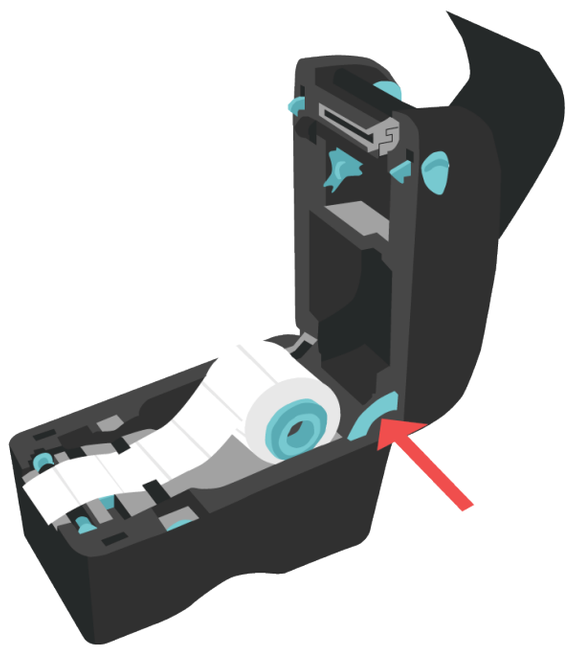

4. To shut the printer, push the support hinge in, then gently shut the printer, ensuring it latches shut. Press the Feed button on the printer before printing, to ensure the tag is printed correctly.

Loading the Ribbon

You need to remove the old ribbon (which will be spooled under the top cover shown in step 1) before loading a new ribbon. To remove this ribbon, simply hold the ribbon roll and move it to the right (away from the blue gear).

1. To begin, open the printer top cover by pulling the tabs located on each side towards the front of the printer, and then lift the top cover to the maximum open angle.

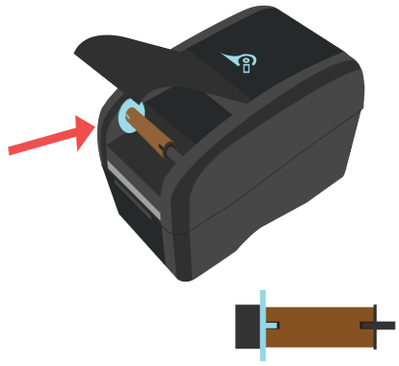

2. Insert an empty core between the gear and the axle - ensure the notches align as shown

3. Open the printer and get the thermal transfer ribbon ready. Ensure the ribbon unwinds from underneath as shown in Step 5

4. Push the ribbon into the right axle (black), then align the notches on the left and insert the ribbon onto the gear (blue)

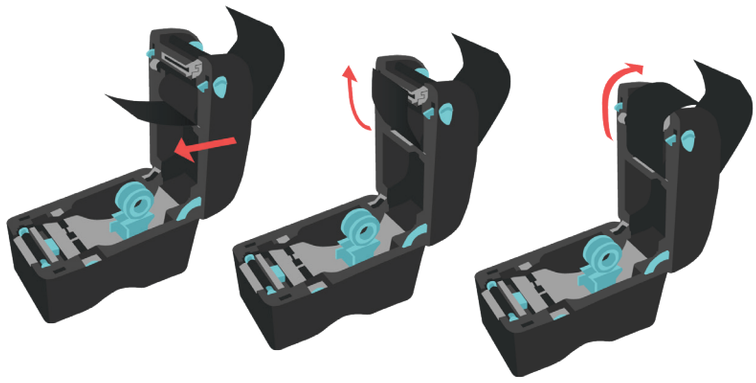

5. Next, gently pull the ribbon out, up and over the print head, around to the empty core.

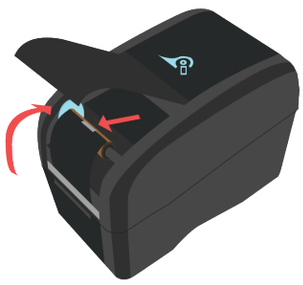

6. Attach the ribbon to the empty roll using a piece of tape - try to attach the ribbon as straight as possible.

7. Use the ribbon rewind gear to tighten the ribbon against the print head, then close the printer.

LED and Button Functions

This printer has one button and one three-colour LED indicator. By indicating the LED with different colour and pressing the button, printer can feed labels, pause the printing job, select and calibrate the media sensor, print printer self-test report, reset printer to defaults (initialization). Please refer to the button operation below for different functions.

LED Colour	Description
Solid Green	This indicates that the power is on and the device is ready to use.
Flashing Green	This indicates that the system is downloading data from PC to memory or the printer is paused.
Amber	This indicates that the system is clearing data from printer.
Solid Red	This illuminates printer head open, cutter error.
Flashing Red	This indicates a printing error, such as head open, paper empty, paper jam or memory error etc.

Regular Button Function

Feed labels

When the printer is ready, press the button to feed one label to the beginning of next label.

Pause the printing job

When the printer is printing, press the button to pause a printing job. When the printer is paused, the LED will be green flashing. Press the button again to continue the printing job.

Power on Utilities

There are six power-on utilities to set up and test printer hardware.

1. Turn off the power switch.
2. Hold the Feed button then turn on the power switch.
3. The printer LED will cycle through the following options. Release the button when the LED reaches the relevant utility.

	LED Colour & Action						
Functions	Amber	Red (5 Flashes)	Amber (5 Flashes)	Green (5 Flashes)	Green/ Amber (5 Flashes)	Red/ Amber (5 Flashes)	Solid Green
Gap/Black Mark Sensor Calibration		Release					
Gap/Black Mark Sensor Calibration, Self Test and Enter Dump Mode			Release				
Printer Initialisation				Release			
Set Black Mark Sensor as Media Sensor and Calibrate the Black Mark Sensor					Release		
Set Gap Sensor as Media Sensor and Calibrate the Gap Sensor						Release	
Skip AUTO.BAS							Release

Gap/Black Mark Sensor Calibration

Gap/black mark sensor sensitivity should be calibrated in the following circumstances:

1. A brand new printer
2. Change label stock
3. Printer initialization

Please follow the steps below to calibrate the gap/black mark sensor.

1. Turn off the power switch.
2. Hold on the button then turn on the power switch.
3. Release the button when LED becomes red and flashing. (Any red will do during the 5 flashes).
4. It will calibrate the gap/black mark sensor sensitivity.
   - The LED colour will be changed as following order:
     1. Amber
     2. Red (5 flashes)
     3. Amber (5 flashes)
     4. Green (5 flashes)
     5. Green/amber (5 flashes)
     6. Red/amber (5 flashes)
     7. Solid green

Note: Sensor calibration can be done by the power on utility.
Note: Please select gap or black mark sensor type prior to calibrate the sensor.

Gap/Black Mark Calibration, Self-test and Dump Mode

While calibrating the gap/black mark sensor, printer will measure the label length, print the internal configuration (self-test) on label and then enter the dump mode. To calibrate gap or black mark sensor depends on the sensor setting in the last print job.

Please follow the steps below to calibrate the sensor.

1. Turn off the power switch.
2. Hold on the button then turn on the power switch.
3. Release the button when LED becomes amber and flashing. (Any amber will do during the 5 flashes)
   - The LED colour will be changed as following order.
     1. Amber
     2. Red (5 flashes)
     3. Amber (5 flashes)
     4. Green (5 flashes)
     5. Green/amber (5 flashes)
     6. Red/amber (5 flashes)
     7. Solid green
4. The printer will calibrate the sensor and measure the label length and then print the internal settings. Then it enter Dump Mode.

Note: Sensor calibration can be done by power on utility.
Note: Please select gap or black mark sensor type prior to calibrate the sensor.

Dump mode

Printer will enter dump mode after printing printer configuration. In the dump mode, all characters will be printed in 2 columns as following. The left side characters are received from your system and right side data are the corresponding hexadecimal value of the characters. It allows users or engineers to verify and debug the program. Dump mode requires 2” wide paper width.

Note:
1. Turn off / on the power to resume printer for normal printing.
2. Press FEED button to go back to the previous menu.

Printer Initialization

Printer initialization is used to clear DRAM and restore printer settings to defaults. Printer initialization is activated by the following procedures.

1. Turn off the power switch.
2. Hold on the button then turn on the power switch.
3. Release the button when LED turns green after 5 amber flashes. (Any green will do during the 5 flashes).
   - The LED colour will be changed as following:
     1. Amber
     2. Red (5 flashes)
     3. Amber (5 flashes)
     4. Green (5 flashes)
     5. Green/amber (5 flashes)
     6. Red/amber (5 flashes)
     7. Solid green

Printer configuration will be restored to defaults as below after initialisation.

Parameter	Default setting
Speed	127 mm/sec (5 ips) (203DPI) 76.2 mm/sec (3 ips) (300DPI)
Density	8
Label Dimensions	2” (50.8 mm) x 2” (50.8 mm)
Sensor Type	Gap sensor
Gap Setting	0.12” (3.0 mm)
Print Direction	0
Reference Point	0,0 (top left corner)
Offset	0

Parameter	Default setting
Tear Mode	On
Peel off Mode	Off
Cutter Mode	Off
Serial Port Settings	9600 bps, none parity, 8 data bits, 1 stop bit
Code Page	850
Country Code	001
Clear Flash Memory	No
IP Address	DHCP

Set Black Mark Sensor as Media Sensor and Calibrate the Black Mark Sensor

1. Turn off the power switch.
2. Hold on the button then turn on the power switch.
3. Release the button when LED turns green/amber after 5 green flashes. (Any green/amber will do during the 5 flashes).
   - The LED colour will be changed as following:
     1. Amber
     2. Red (5 flashes)
     3. Amber (5 flashes)
     4. Green (5 flashes)
     5. Green/amber (5 flashes)
     6. Red/amber (5 flashes)
     7. Solid green

Set Gap Sensor as Media Sensor and Calibrate the Gap Sensor

1. Turn off the power switch.
2. Hold on the button then turn on the power switch.
3. Release the button when LED turns red/amber after 5 green/amber flashes. (Any red/amber will do during the 5 flashes).
   - The LED colour will be changed as following:
     1. Amber
     2. Red (5 flashes)
     3. Amber (5 flashes)
     4. Green (5 flashes)
     5. Green/amber (5 flashes)
     6. Red/amber (5 flashes)
     7. Solid green

Troubleshooting

The following guide lists the most common problems that may be encountered when operating this bar code printer. If the printer still does not function after all suggested solutions have been invoked, please contact the Customer Service Department of your purchased reseller or distributor for assistance.

LED Status / Colour	Printer Status	Possible Cause	Recovery Procedure
OFF	No response	No power	* Turn on the power switch. * Check if the green LED is lit on power supply. If it is not lit on, power supply is broken. * Check both power connections from the power cord to the power supply and from the power supply to the printer power jack if they are connected securely.
Solid Green	ON	The printer is ready to use	* No action necessary.
Flashing Green	Pause	The printer is paused	* Press the FEED button to resume for printing.
Flashing Red	Error	The out of labels or the printer setting is not correct	**1. Out of labels** - Load a roll of label and follow the instructions in loading the media then press the FEED button to resume for printing. **2. Printer setting is not correct** - Initialise the printer by instructions in “Power on Utility”.

Print Problems

Problem	Possible Cause	Recovery Procedure
Not Printing	Check if interface cable is well connected to the interface connector.	Re-connect cable to interface.
	The serial port cable pin configuration is not pin to pin connected.	Please replace the cable with pin to pin connected.
	The serial port setting is not consistent between host and printer.	Please reset the serial port setting.
	The port specified in the Windows driver is not correct.	Select the correct printer port in the driver.
	The Ethernet IP, subnet mask, gateway is not configured properly.	Configure the IP, subnet mask and gateway.
No print on the label	Label loaded not correctly.	Follow the instructions in loading the media.
Continuous feeding labels	The printer setting may go wrong.	Please do the initialization and gap/black mark calibration.
Paper Jam	Gap/black mark sensor sensitivity is not set properly (sensor sensitivity is not enough)	Calibrate the gap/black mark sensor.
	Make sure label size is set properly.	Set label size exactly as installed paper in the labelling software or program.
	Labels may be stuck inside the printer mechanism near the sensor area.	Remove the stuck label.
Poor Print Quality	Top cover is not closed properly.	Close the top cover completely and make sure the right side and left side levers are latched properly.
	Wrong power supply is connected with printer.	Check if 24V DC output is supplied by the power supply.
	Check if supply is loaded correctly.	Reload the supply.
	Check if dust or adhesives are accumulated on the print head.	Clean the print head.
	Check if print density is set properly.	Adjust the print density and print speed.
	Check print head test pattern if head element is damaged.	Run printer self-test and check the print head test pattern if there is dot missing in the pattern.

Maintenance

This session presents the clean tools and methods to maintain your printer.

Please use one of following material to clean the printer.

- Cotton swab (Head cleaner pen)
- Lint-free cloth
- Vacuum / Blower brush
- 100% ethanol

Printer Part	Method	Interval
Print Head	1. Always turn off the printer before cleaning the print head. 2. Allow the print head to cool for a minimum of one minute. 3. Use a cotton swab and 100% ethanol to clean the print head surface.	Clean the print head when changing a new label roll
	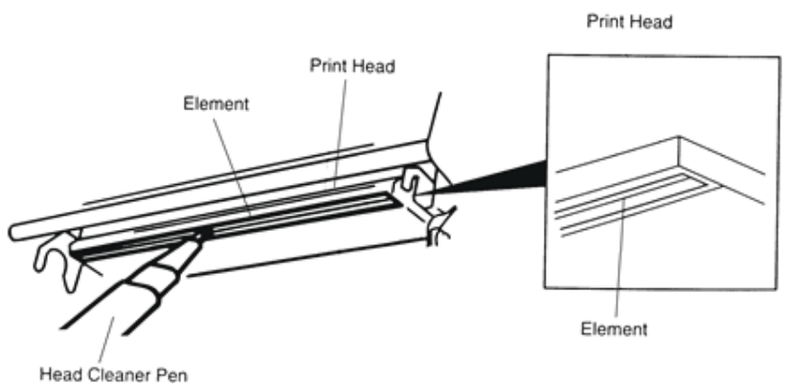	
Platen Roller	1. Turn the power off. 2. Rotate the platen roller and wipe it thoroughly with 100% ethanol and a cotton swab, or lint-free cloth.	Clean the platen roller when changing a new label roll
Tear Bar/Peel Bar	Use the lint-free cloth with 100% ethanol to wipe it.	As needed
Sensor	Compressed air or vacuum	Monthly
Exterior	Wipe it with water-dampened cloth	As needed
Interior	Brush or vacuum	As needed

Note:

- *Do not touch printer head by hand. If you touch it accidentally, please use ethanol to clean it.*
- *Please use 100% Ethanol. DO NOT use medical alcohol, which may damage the printer head.*
- *Regularly clean the print head and supply sensors when changing media to keep optimal performance and extend printer life.*
- *The maximum printing ratio per dot line is 15% for this printer. To print the full web black line, the maximum black line height is limited to 40 dots, which is 5mm for 203 DPI resolution printer and 3.3mm for 300 DPI resolution printer.*

Wavecom Tags & Ribbons

To support our test and print units we offer to you our range of electrical test tags that are made of the highest grade polypropylene and polyester label materials. These materials are robust and resistant to tearing and will cope with harsh Australian environments. It is recommended in extreme external conditions you use UV resistant tags

Wavecom Printable Tags

The test tags/labels we offer come in the full range of colours, each tag comes with a clear white area where a barcode can be printed onto, ensuring easy and accurate scanning. This ensures that your barcode scanner can read the barcode.

All of the Wavecom tags are suitable for printing using every brand of thermal transfer printers available from around the world. The adhesive used on our tags is most aggressive and comes highly recommended for use in the electrical test and tag industry, there should be no butterflying once applied.

Order Information:

Standard Tags (500 Tags per Roll)	Part no: WCM-TAG-(W, R, BL, G, O, Y, BR) - *eg. WCM-TAG-W*
UV Tags (400 Tags per Roll)	Part no: WCM-UV-TAG-(W, R, BL, G, O, Y, BR) *eg. WCM-UV-TAG-W*

Colour Options: (W) White, (R) Red, (BL) Blue, (G) Green, (O) Orange, (Y) Yellow, (BR) Burgundy

Wavecom Printing Ribbon

In support of the Wavecom Tags we offer two grades of ribbons for printing electrical test tags. Our standard ribbon (WCM-Ribbon) is recommended for locations where the printed tag is not exposed to harsh outdoor conditions, such as offices and factories.

Our UV Ribbon (WCM-UV-Ribbon) is recommended for harsher environments like mines or where the equipment is being tested is exposed to the elements. To ensure the durability of print on your tag it is essential that the right ribbon is used on the appropriate label material.

Order information:

Standard Ribbon	Part no: WCM-RIBBON
UV Ribbon	Part no: WCM-UV-RIBBON

Laminated Overlays

In locations where a tag is exposed to harsh chemicals or extreme environments a printed tag may need additional protection to ensure it is readable when the appliance needs to be retested. In these instances, clear film overlays can be applied over the top of an existing tag. These clear laminate overlays are made of strong durable synthetic materials and come with an adhesive backing that ensures that when the overlay is stuck down it stays stuck. This allows you to use your standard Wavecom tags in harsh environments where a standard tag would not normally be suitable.

To use our laminated overlays, the clear laminate is placed over the printed tag before removing it from the backing paper. The combined tag and overlay is then removed from the backing paper and applied to the appliance as normal.

Order information:

Clear Laminated Overlays (1000 per Roll)	Part no: WCM-TAG-ALL-Clear-LAM

Other Information

Optional Accessories

500mm Metal Braid for Earthing Appliances	Part No: TnT-ES 500
3-Phase Adaptor 20A & 32A 5pin + 5pin	Part No: WCM-3PH-MADP
HBC Fuse	Part No: WCM-HBC10AM205
Isolation Transformer for RCD testing	Part No: WCM-ISOT
Probe Kit	Part No: WCM-Probe
Wavecom Printer Labels	Part No: WCM-TAG-(Colour)
Wavecom Printer Ribbons	Part No: WCM-RIBBON
WinPATS Extended Support (12 months)	Part No: WCM-WinPATS Support

Disclaimer – E&OE

All specifications may be subject to be change by Wavecom Pty. Ltd. without prior notice.

Updated Specifications & Model changes may be found on the Wavecom website: www.wavecom.com.au

At the time of developing this manual, all care and consideration for accuracy has been implemented. Wavecom accepts no responsibility for any errors or omissions in this document. This is partly based on the fact that Electronics & Electrical testing and specifications worldwide are constantly changing and that Local, State and National Regulatory Authorities may also have differing or additional requirements. It is strongly recommended the Purchaser check Local Regulatory Standards that may be applicable in your region.

Tester Serial Number

WinPATS Android App
Discount Coupon
(Valid for one use only)

Purchase Information

Date of Purchase

Sold By

The TnP-500 is proudly designed and manufactured in Australia by Wavecom.

Wavecom SA

257 Grange Road,
Findon SA, 5023

P: 08 8243 3500
F: 08 8243 3501
E: service@wavecom.com.au

Wavecom WA

Unit 2/17 Casino Street,
Welshpool WA, 6106

P: 08 9353 1943
F: 08 9353 4319
E: saleswa@wavecom.com.au

Wavecom VIC

Mark Kennedy
M: 0430 299 164

P: 03 9897 4711
F: 08 8243 3501
E: service@wavecom.com.au